ASTRO CONTENITORI INDUSTRIALI

MOD. CVS 19 | LITRI 1850

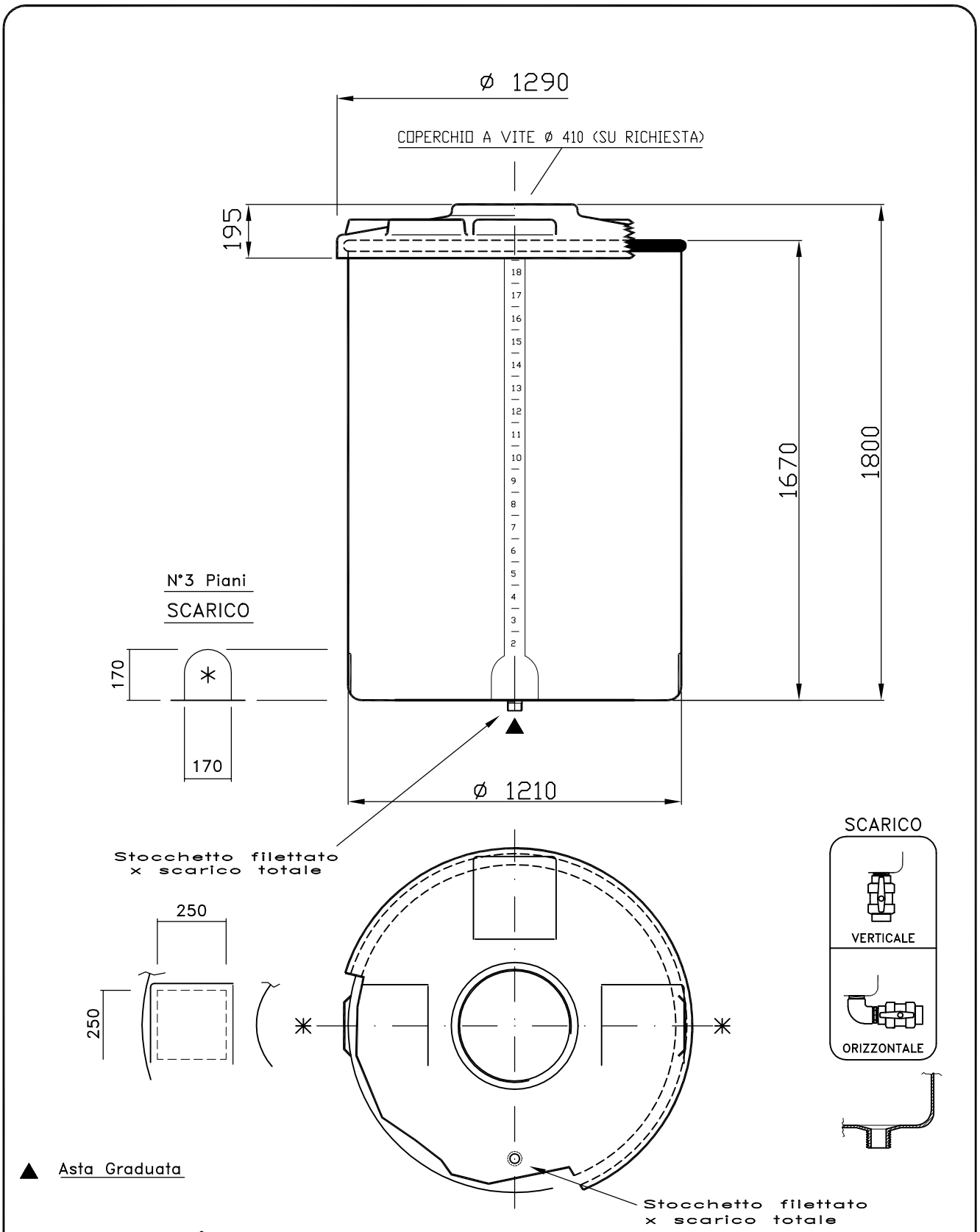

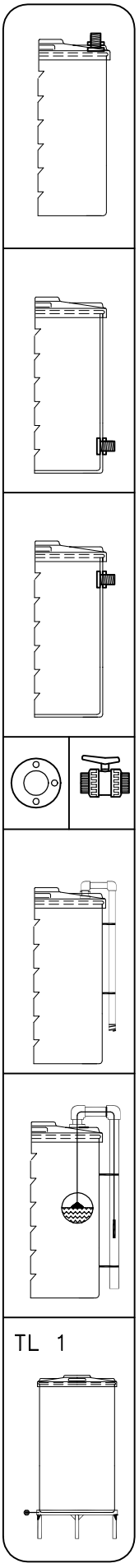

scarico totale : = 1" – 1¼" – 1½" – 2" – 2½" – 3" – 4"

DISEGNO N. 996 CST	DATA 22/02/05	Manenti	z:\uff.tec.\dis\disegni standard\cva\cvs19.dwg

Tel. 035/844060 Fax 035/844646