SL – 11.06.09 – ..\–disegni standard\tcc\polveri\a19_3

dis. 6019 AS

TCC 19/3 – LT. 1.980

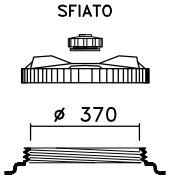

CPF 410

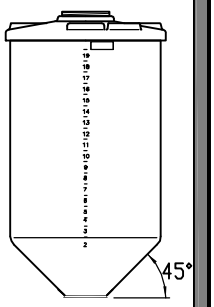

OTRE

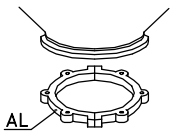

CS 3

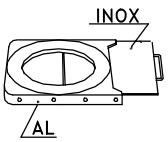

GH 3

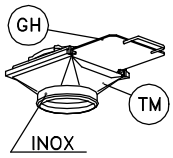

TM 3

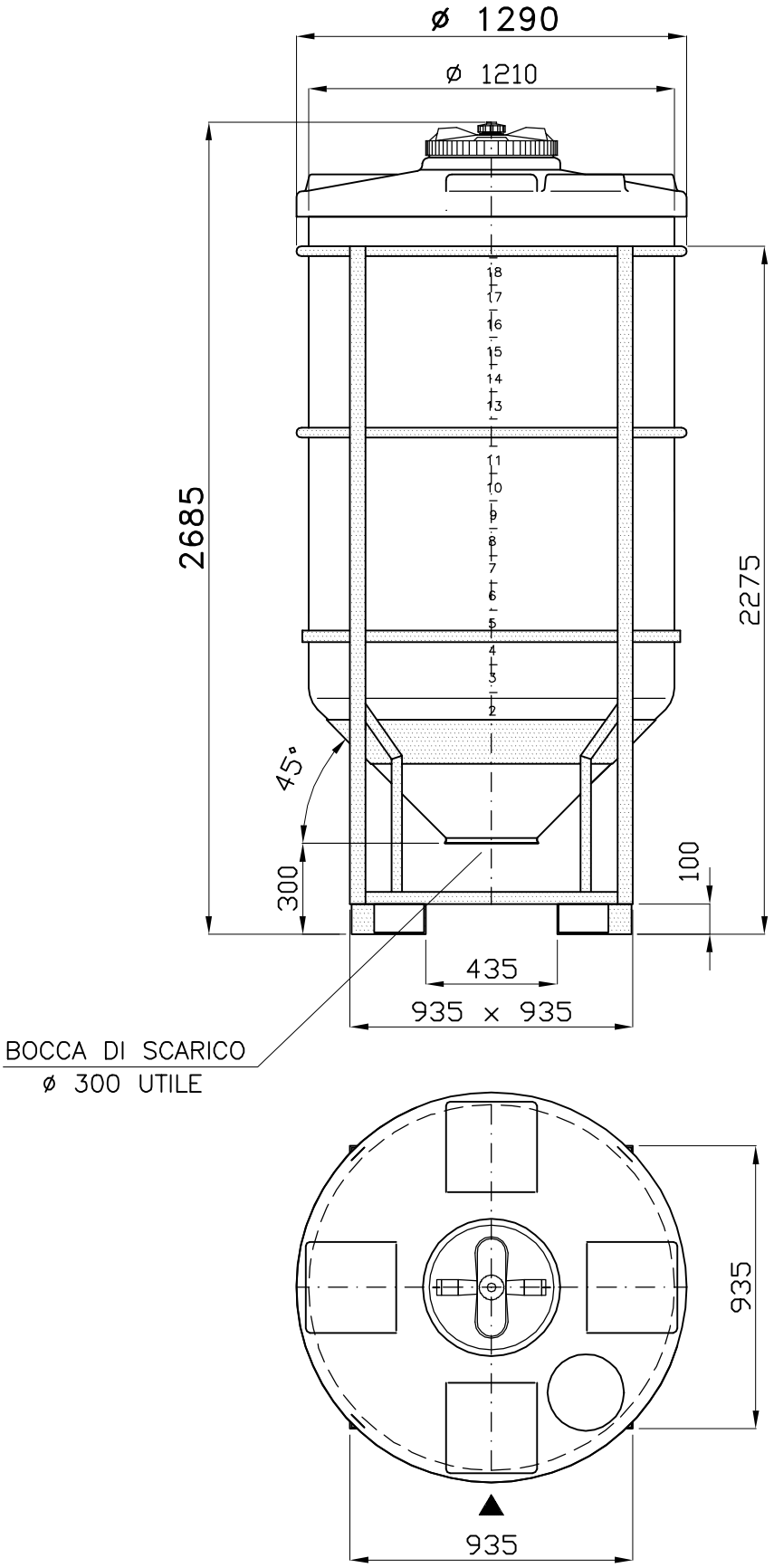

T/120.1863

Tel. 035/844060 ASTRO Fax 035/844646