tcc\a19_4

dis. 4312/01 AS

TCC 19/4 – LT. 1980

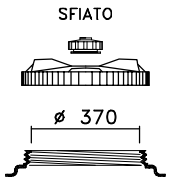

CPF 410

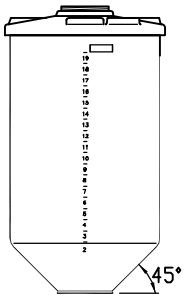

OTRE

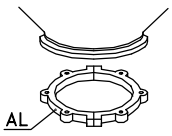

CS 4

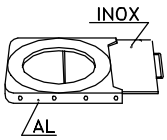

GH 4

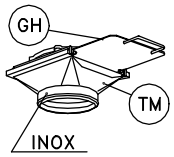

TM 4

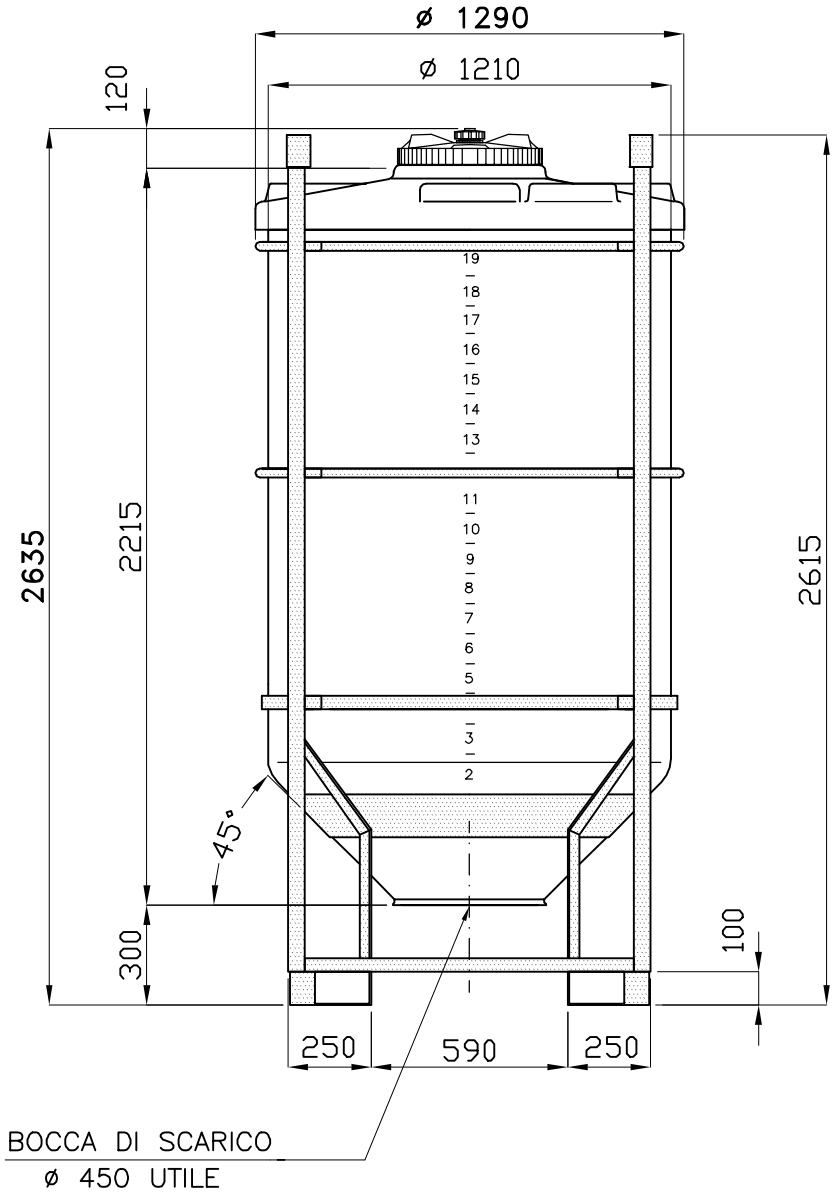

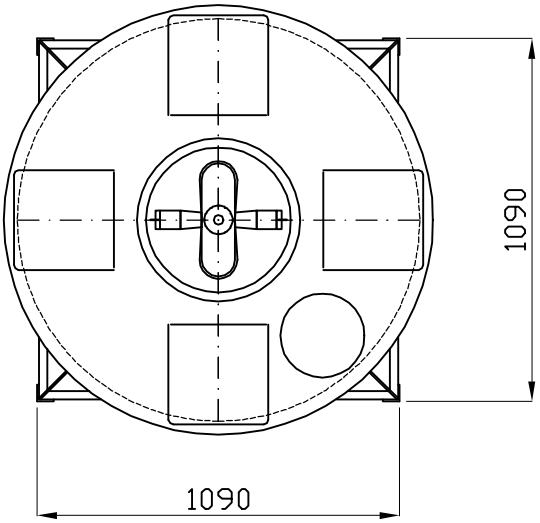

01: SL – 11.06.09 – TESTATA

Tel. 035/844060 ASTRO Fax 035/844646