tcc\a6_3 anello

TCC 6/3 – LT. 650

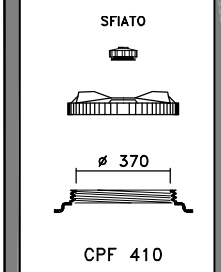

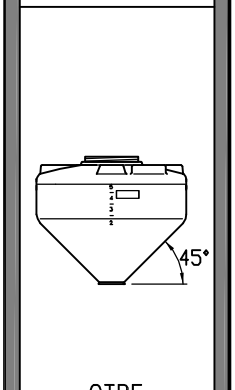

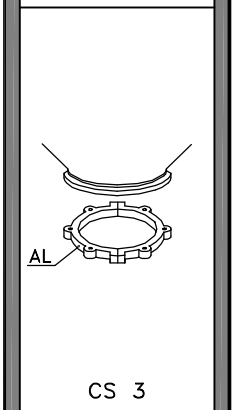

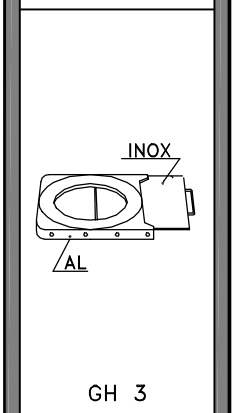

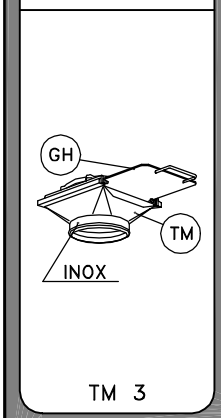

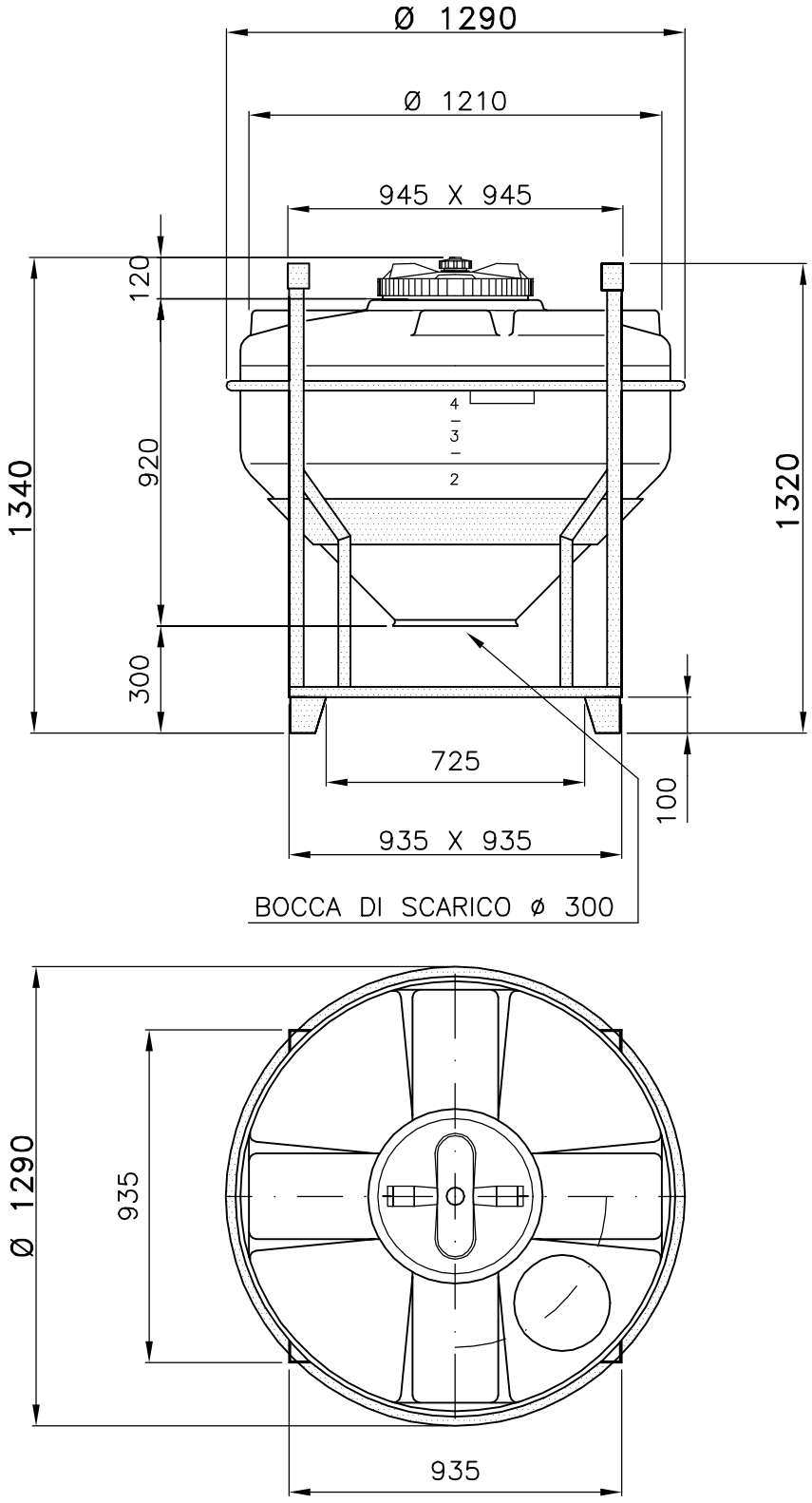

dis. 2993/1

Tel. 035/844060 ASTRO Fax 035/844646