tcs\a-20_2

dis. 2656/1 AS

TCS 20/2 – LT. 2.000

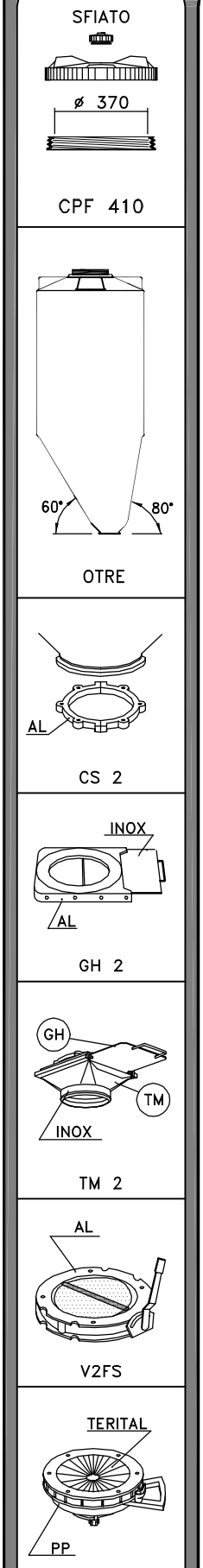

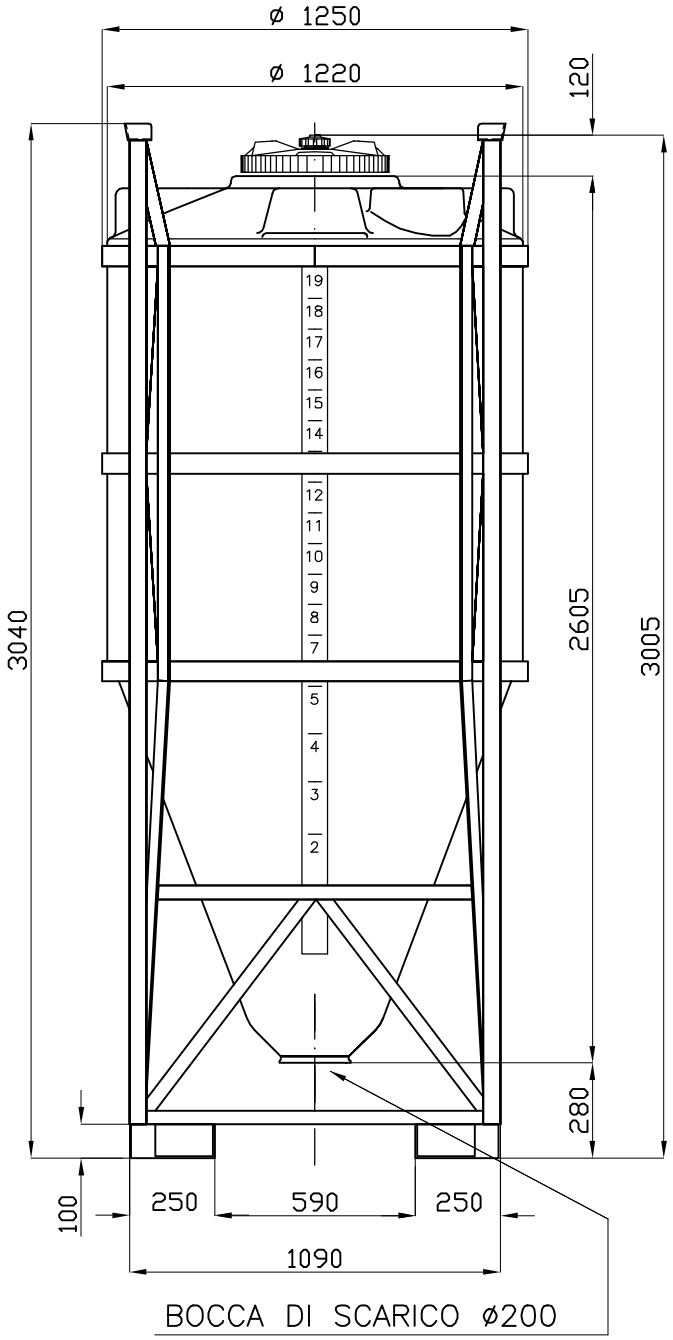

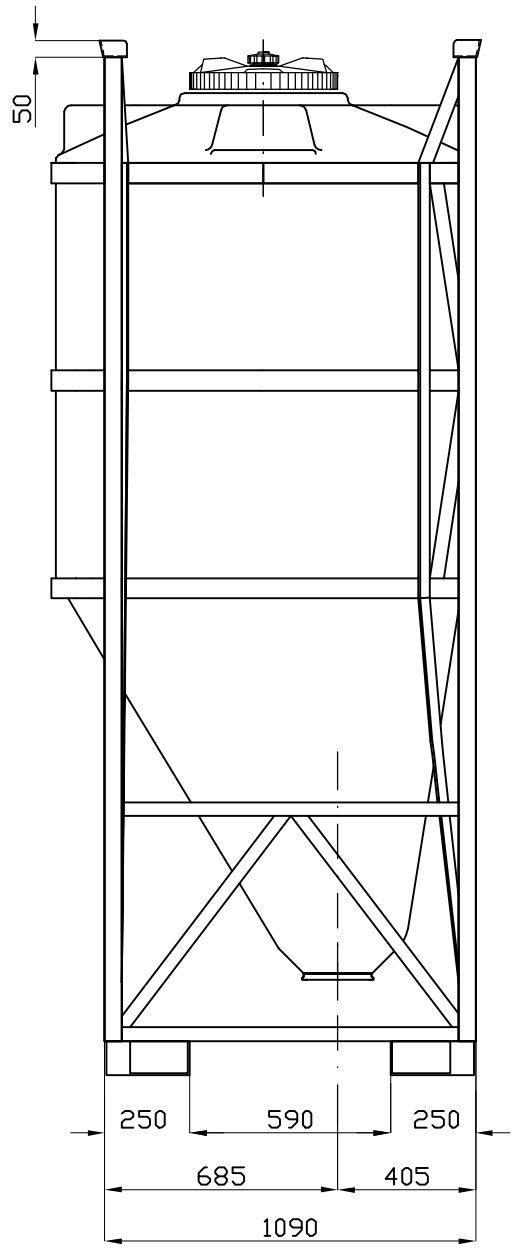

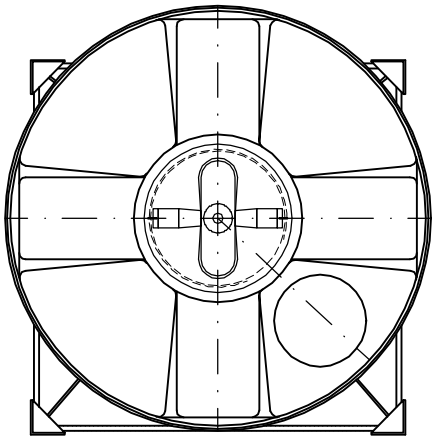

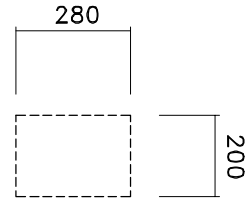

N° 4 Piani Superiori
per attacchi

/1:SL – 16.01.08 – OTRE; PIASTRE APPOGGIO FACILE

Tel. 035/844060 ASTRO Fax 035/844646