tcs\a-12_4-2

TCS 12/4 – LT. 1.280

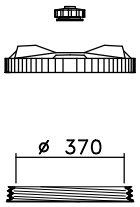

CPF ø 410

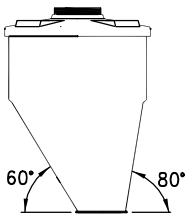

OTRE

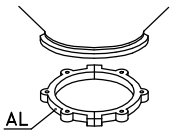

CS 4

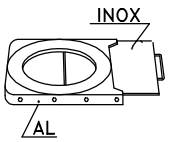

GH 4

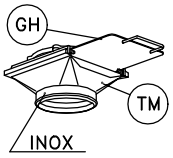

TM 4

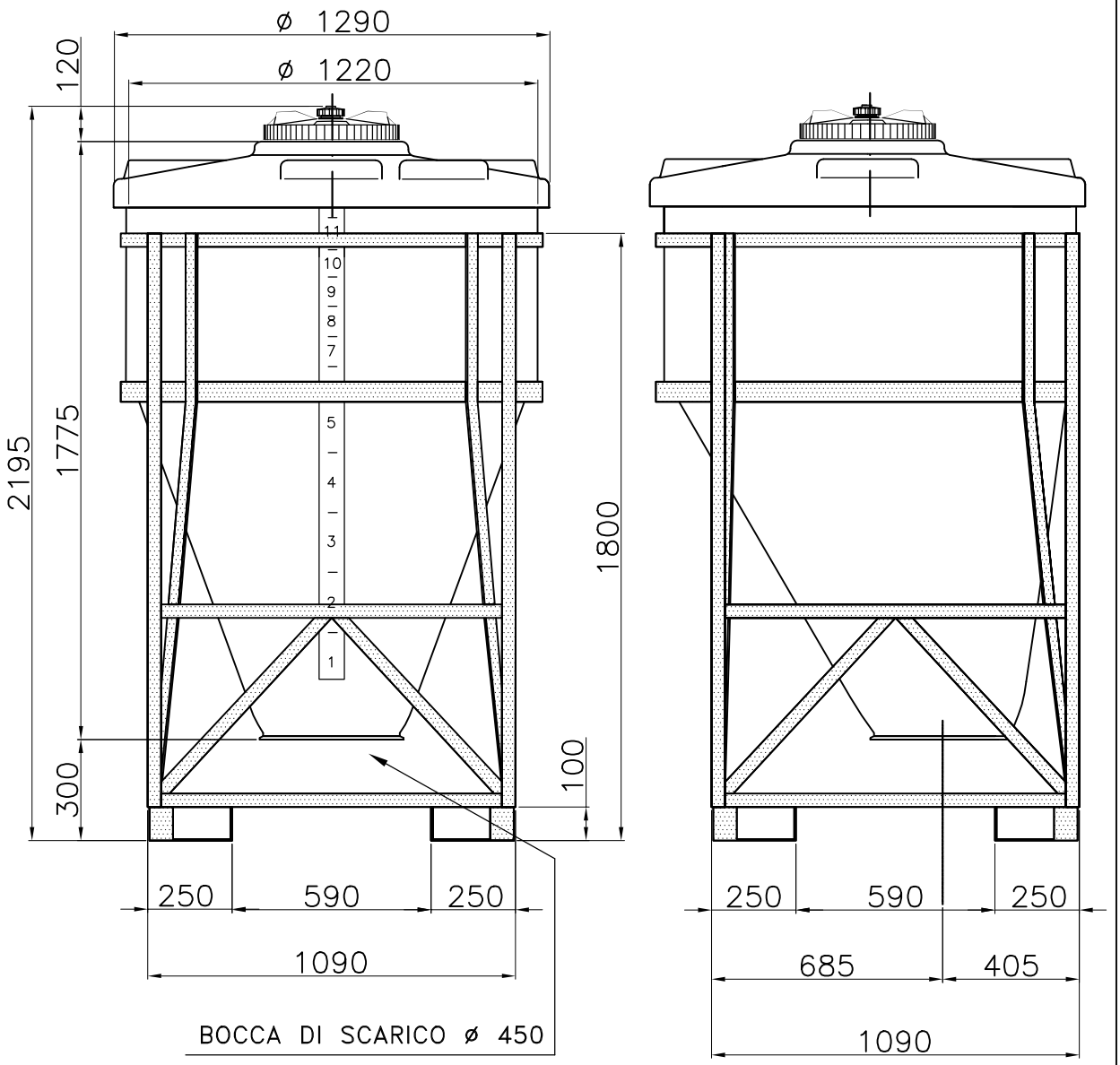

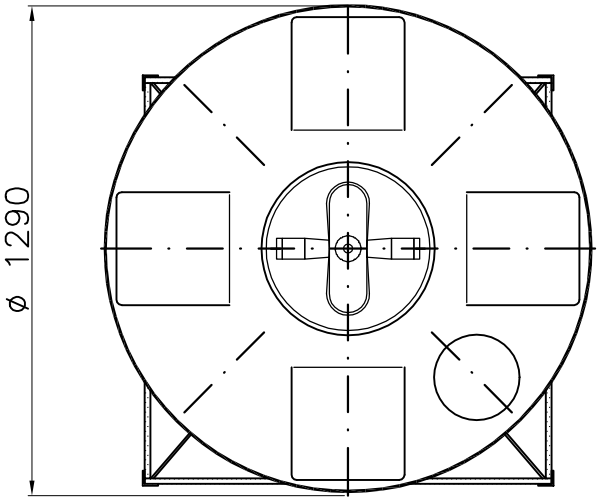

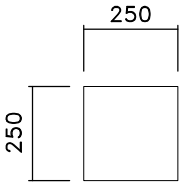

N.4 Piani Superiori
per attacchi

dis.2582/01 AS

Tel. 035/844060 ASTRO Fax 035/844646