tcs\a-9_2

dis. 2437/02 AS

TCS 9/2 – LT. 1.005

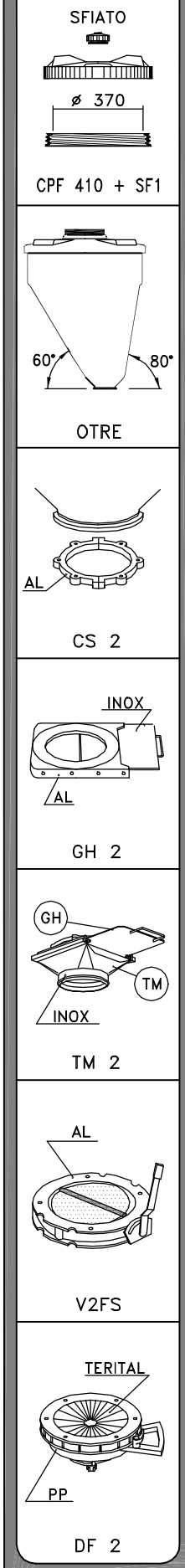

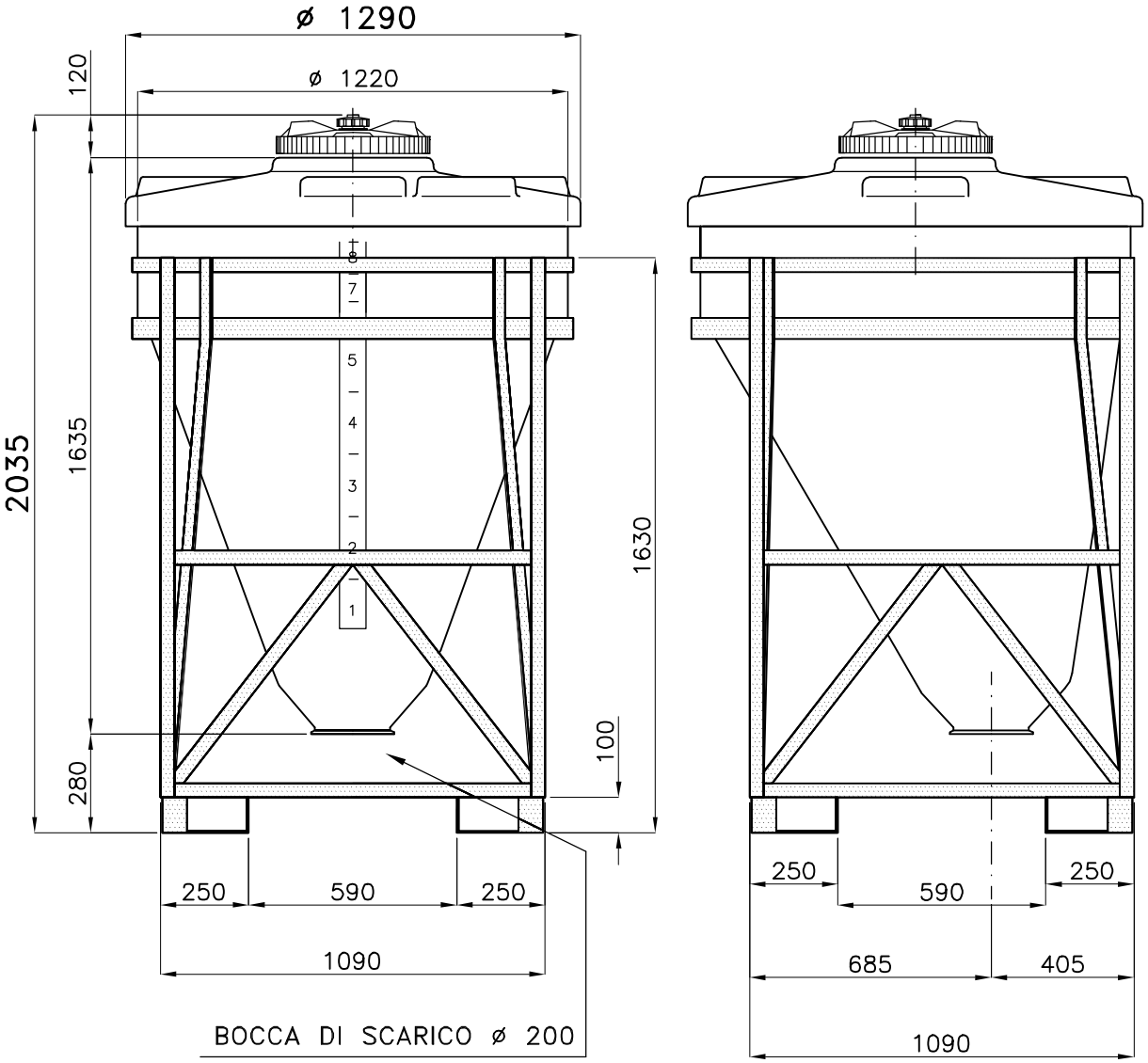

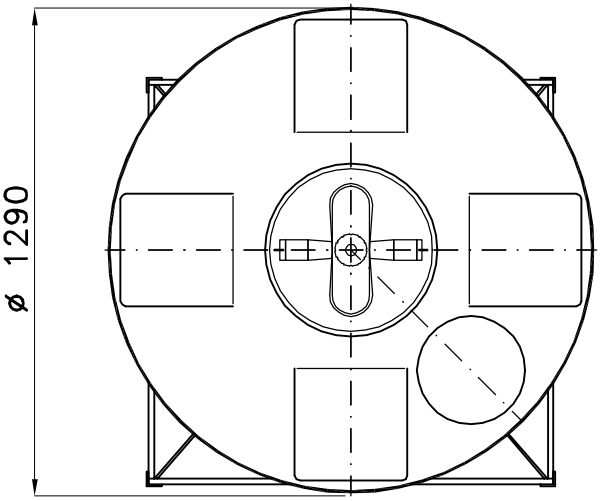

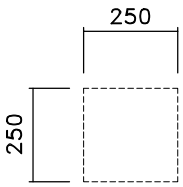

N.4 Piani Superiori
per attacchi

02: SL – 06.08.09 – TESTATA;SF1 su CPF

Tel. 035/844060 ASTRO Fax 035/844646