TSA 9/4 – LT. 900

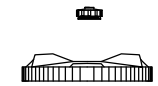

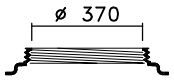

CPF ø 410
(optional)

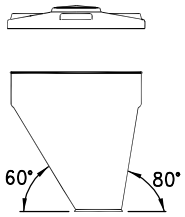

OTRE

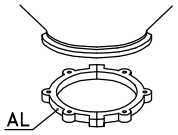

CS 4

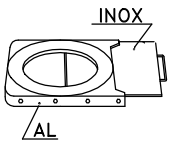

GH 4

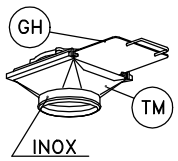

TM 4

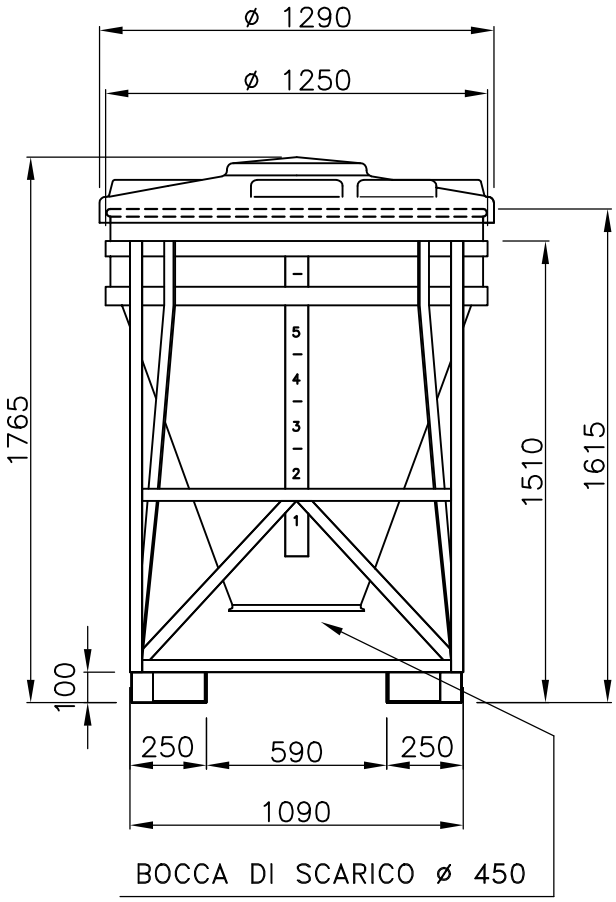

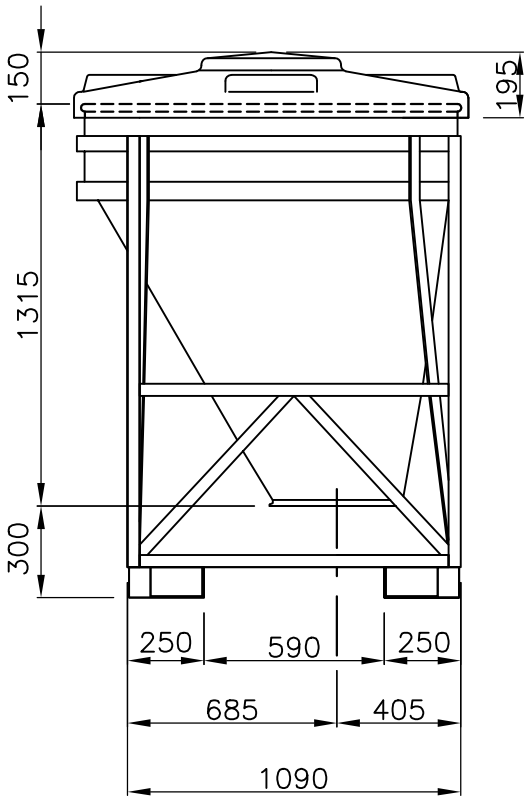

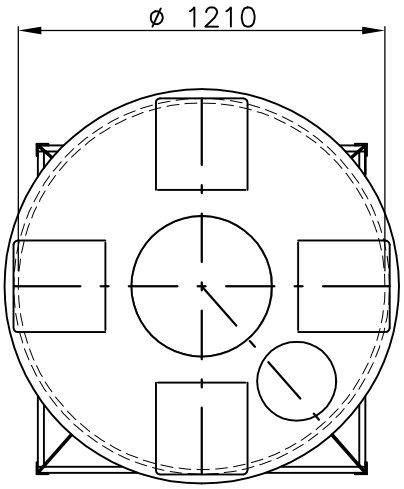

11/06/07–M.M.–01)Agg. Pianetto

dis. 2319/1

Tel. 035/844060 ASTRO Fax 035/844646