tsa\9_3st

TSA 9/3 – LT. 900

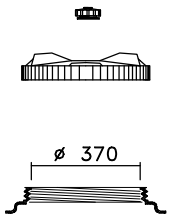

CPF ø 410
(optional)

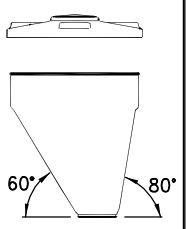

OTRE

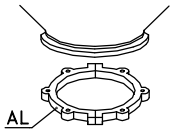

CS 3

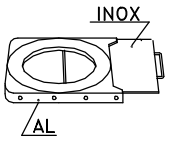

GH 3

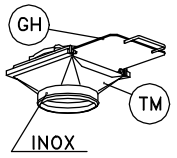

TM 3

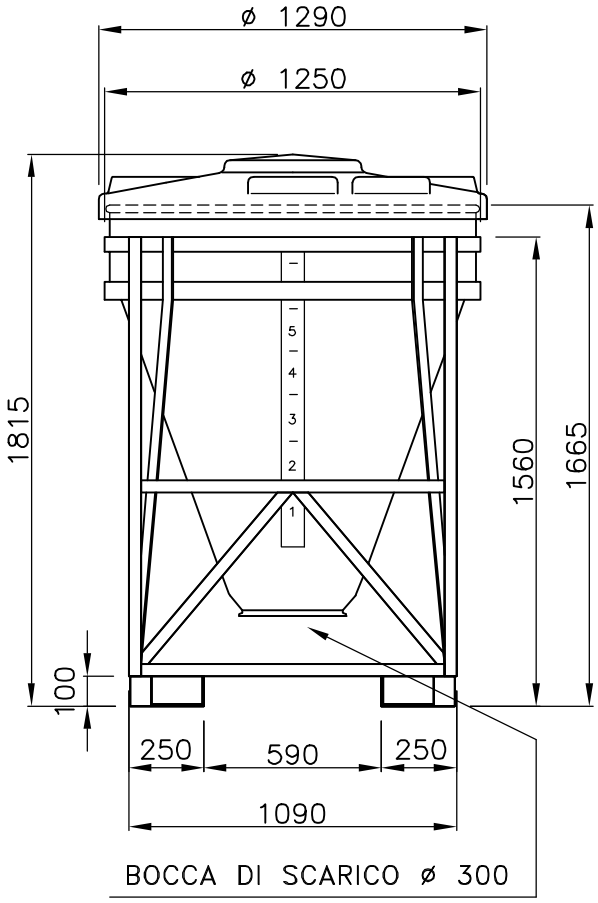

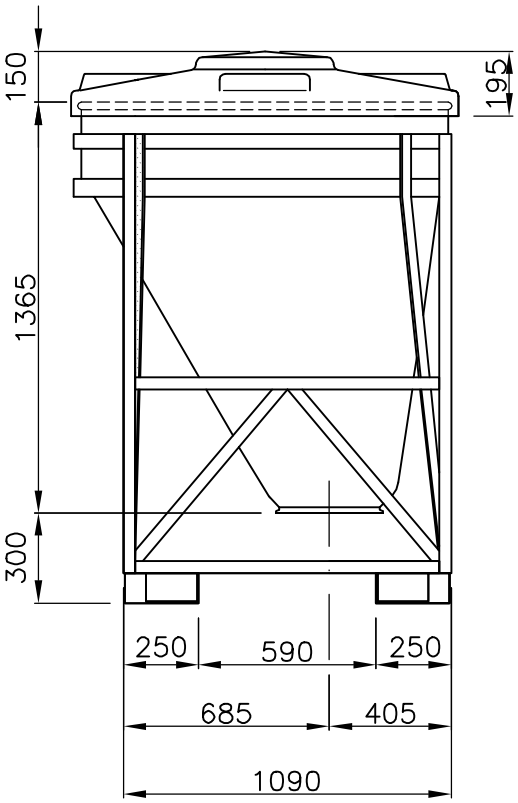

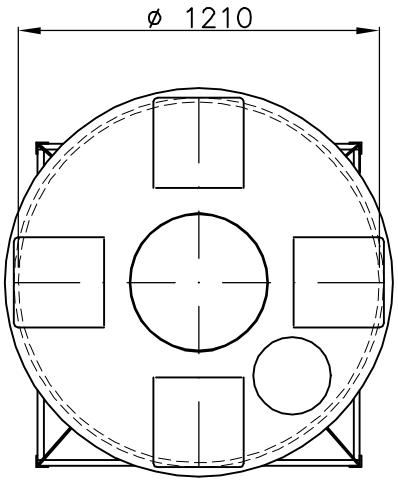

05/06/07–M.M.–01)Agg. Pianetto

dis. 2318/1

Tel. 035/844060 ASTRO Fax 035/844646