tcs\a-15_2

dis. 2293/1 AS

TCS 15/2 - LT. 1.640

SFIATO

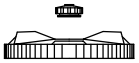

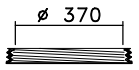

CPF 410

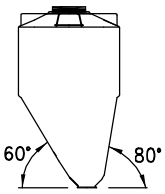

OTRE

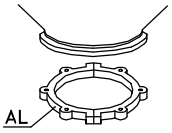

CS 2

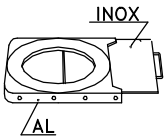

GH 2

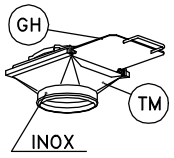

TM 2

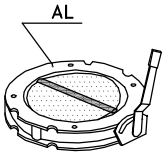

V2FS

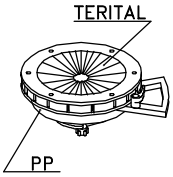

DF 2

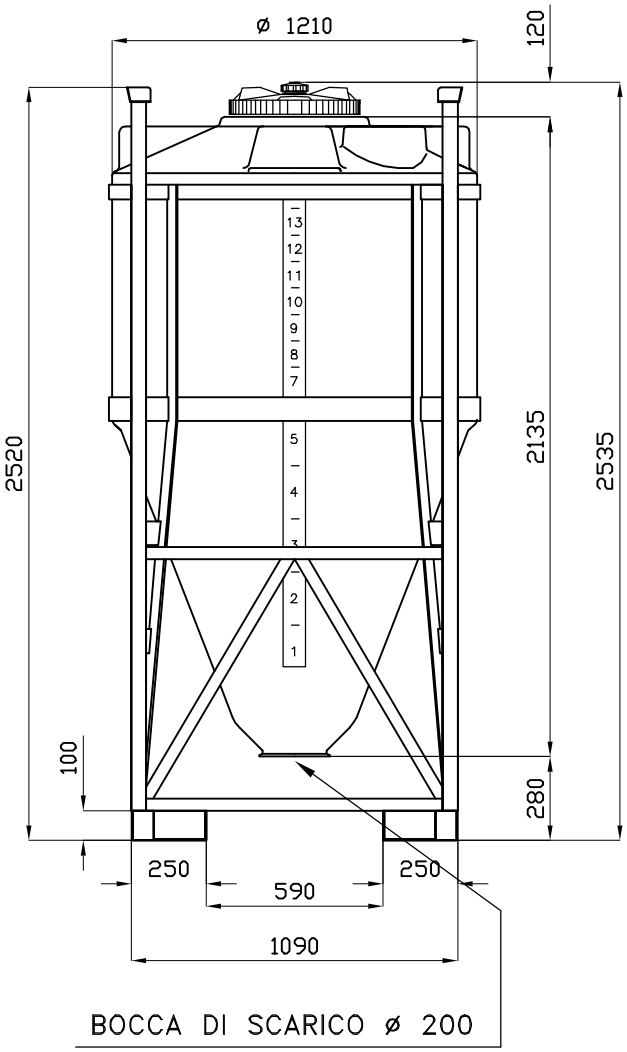

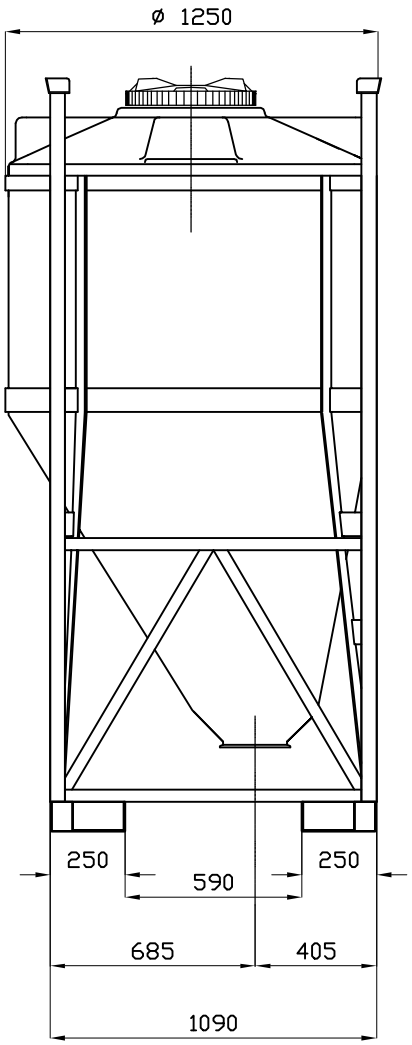

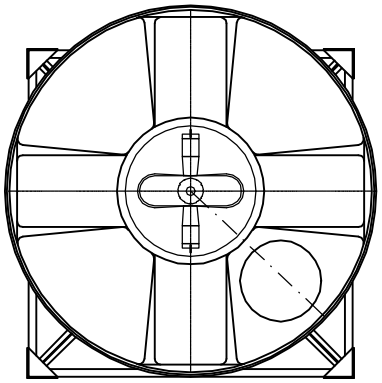

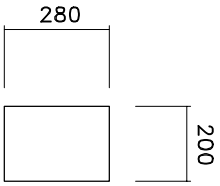

N° 4 Piani Superiori
per attacchi

Tel. 035/844060 ASTRO Fax 035/844646