tcc\a10_3

dis. 2277 AS

TCC 10/3 – LT. 1000

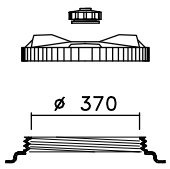

CPF ø 410

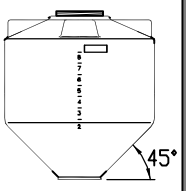

OTRE

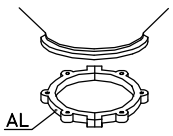

CS 3

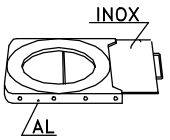

GH 3

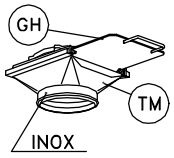

TM 3

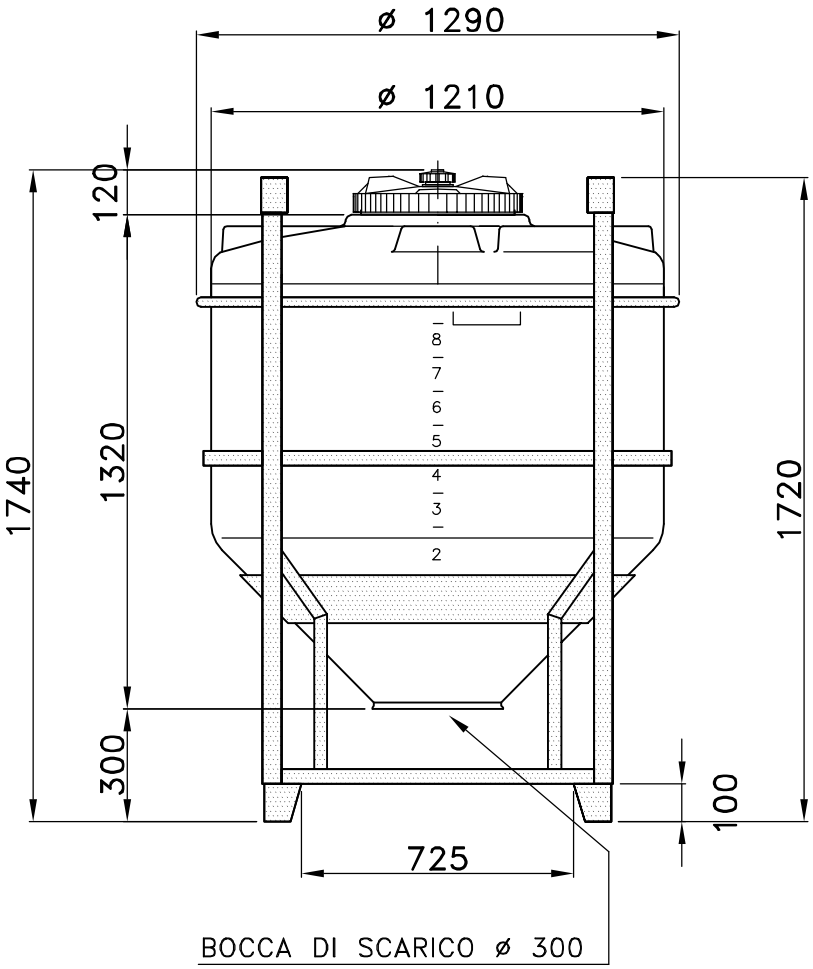

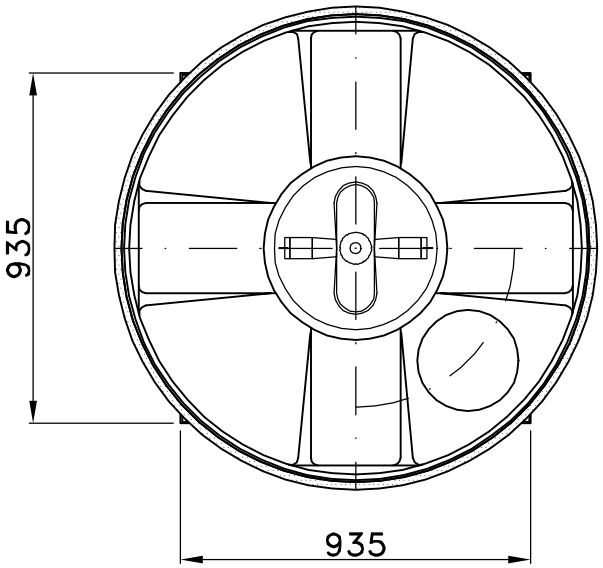

26/10/04 G.T. rifacimento testata

Tel. 035/844060 ASTRO Fax 035/844646