tcs\a-10_3

dis. 2257/1 AS

# TCS 10/3 – LT. 1.015

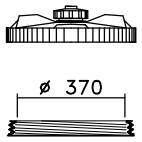


CPF 410 + SF1

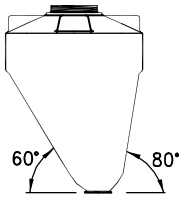


OTRE

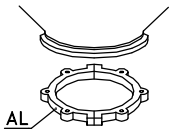


CS 3

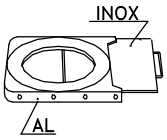


GH 3

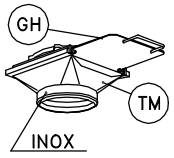


TM 3

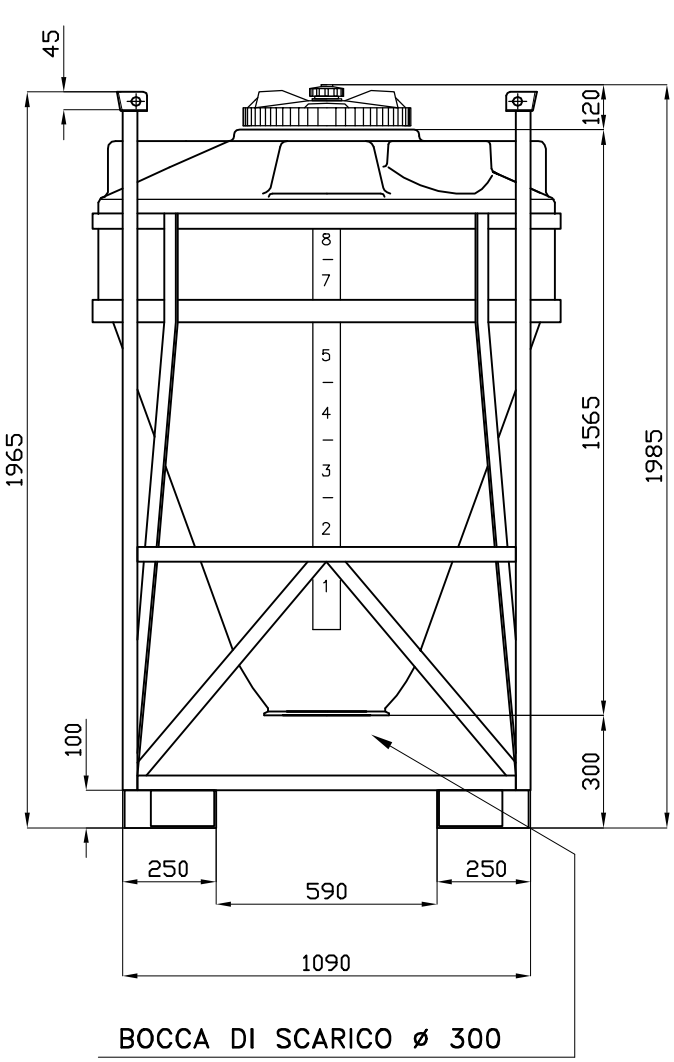


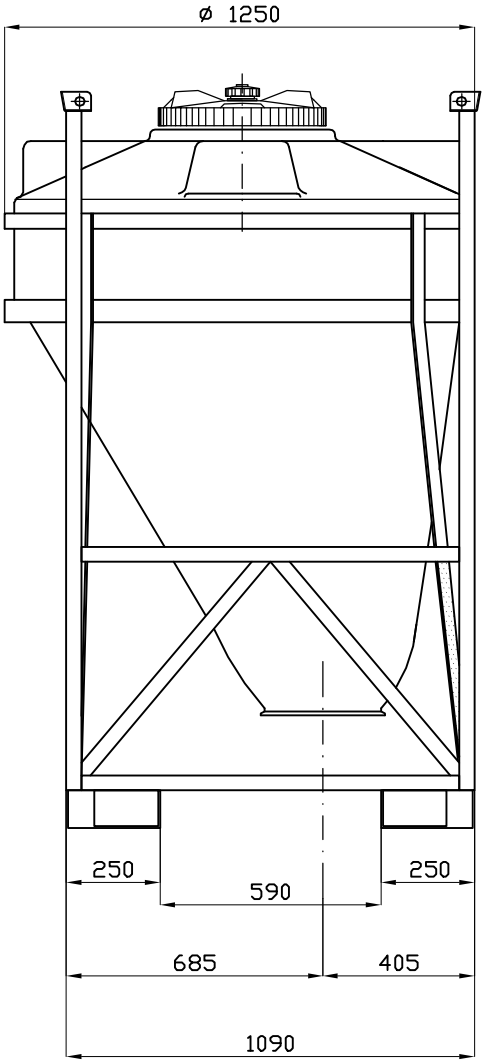


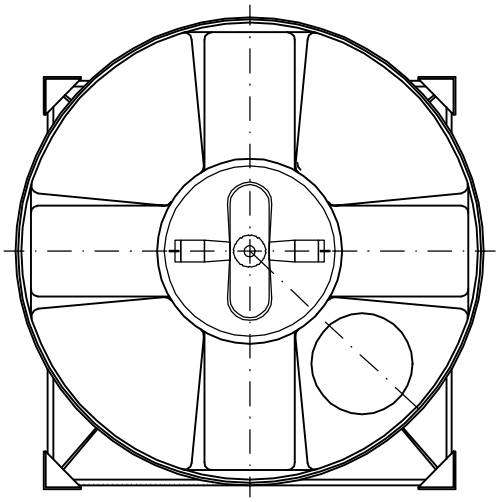

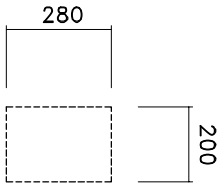


N° 4 Piani Superiori
per attacchi

/1: 28.01.08 – SL – OTRE; P.A.F.; SF1

Tel. 035/844060 ASTRO Fax 035/844646