tcc\a10_2

dis. 2195/1 AS

TCC 10/2 LT. 1000

SFIATO

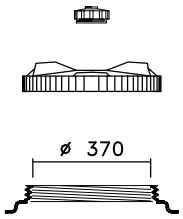

CPF 410

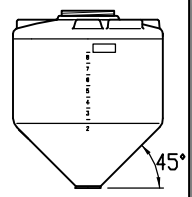

OTRE

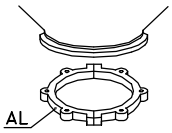

CS 2

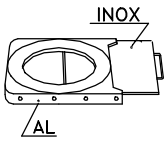

GH 2

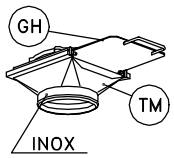

TM 2

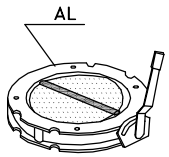

V2FS

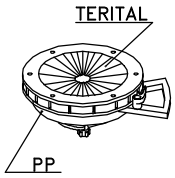

DF 2

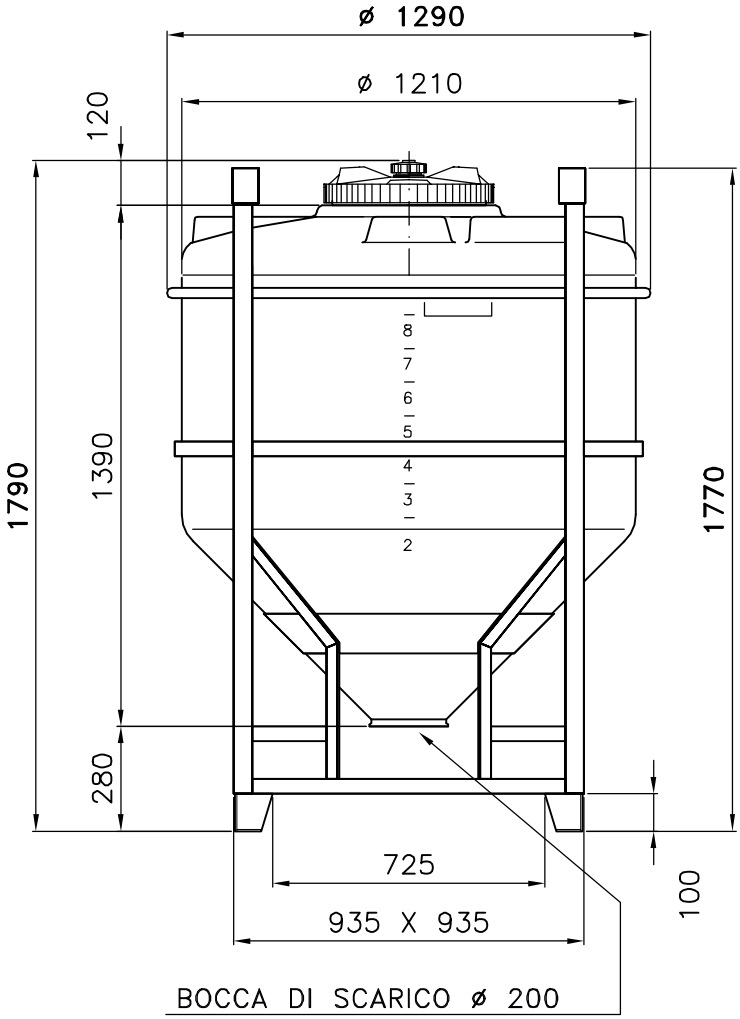

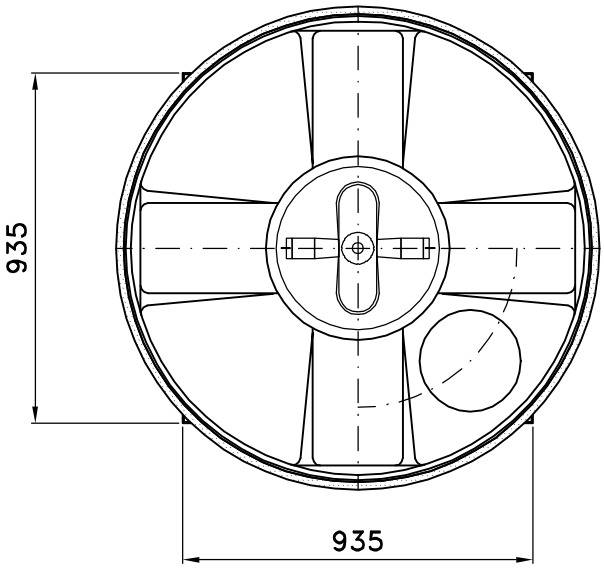

/1: S.L. - 20.04.04 - TESTATA, CPF + SFIATO

Tel. 035/844060 ASTRO Fax 035/844646